ENEA
Ente per le Nuove tecnologie,
l'Energia e l'Ambiente

Ministero dello Sviluppo Economico

RICERCA SISTEMA ELETTRICO

SPES-3 Test Specification

F. Bianchi, M. Ricotti, G. Storrick, M. Dzodzo, A. Maioli

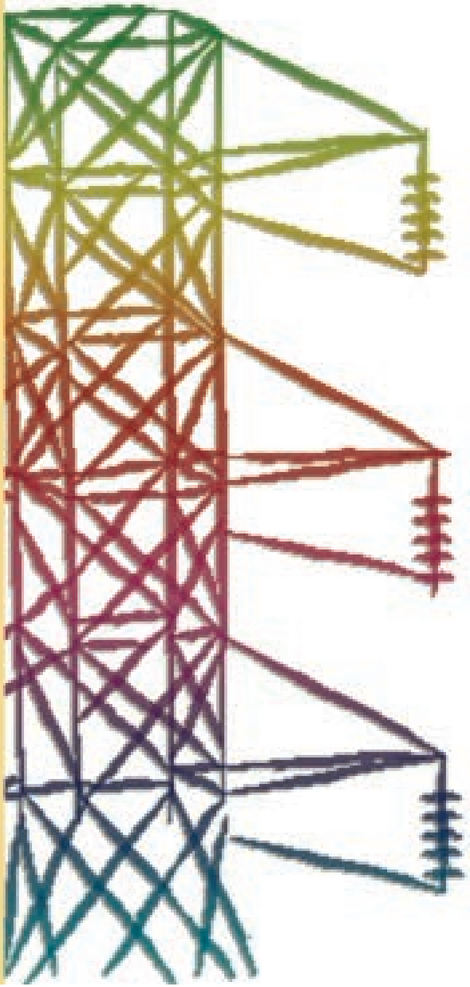

Report RSE/2009/70

Ente per le Nuove tecnologie,
l'Energia e l'Ambiente

Ministero dello Sviluppo Economico

RICERCA SISTEMA ELETTRICO

SPES-3 Test Specification

F. Bianchi, M. Ricotti, G. Storrick, M. Dzodzo, A. Maioli

Report RSE/2009/70

SPES-3 TEST SPECIFICATION

F. Bianchi (ENEA)

M. Ricotti (Politecnico di Milano)

G. Storrick, M. Dzodzo, A. Maioli (Westinghouse)

Agosto 2008

Report Ricerca Sistema Elettrico
Accordo di Programma Ministero dello Sviluppo Economico – ENEA
Area: Produzione e fonti energetiche
Tema: Nuovo Nucleare da Fissione
Responsabile Tema: Stefano Monti, ENEA

Table of contents

List of Acronyms

ADS	Automatic Depressurization System
BDBE	Beyond Design Basis Event
DAS	Data Acquisition System
DBE	Design Basis Event
DEG	Double Ended Guillotine
DVI	Direct Vessel Injection Line
EBT	Emergency Borating Tank
EHRS	Emergency Heat Removal System
ENEA	Italian National Agency for New Technologies, Energy and the Environment
GNEP	Global Nuclear Energy Partnership
IRIS	International Reactor Innovative and Secure
LGMS	Long-Term Gravity Make-Up System
LOCA	Loss Of Coolant Accident
LWR	Light Water Reactor
NPP	Nuclear Power Plants
NPSH	Net Positive Suction Head
ORNL	Oak Ridge National Laboratory
PCCS	Passive Containment Cooling System
PRZ	Pressurizer
RCP	Reactor Coolant Pump
RPV	Reactor Pressure Vessel
SBLOCA	Small Break Loss Of Coolant Accident
SG	Steam Generator
SIET	Società Informazioni Esperienze Termoidrauliche

SPES	Simulatore Pressurizzato per Esperienze di Sicurezza (Pressurised Simulator for Safety Experiments

1. Introduction

IRIS is a modular, economic, medium size (1000 MWth), grid appropriate reactor belonging to NPP Generation 3+, being developed through a strong international partnership for near-term deployment, to offer a simple nuclear plant with outstanding safety, attractive economics and enhanced proliferation resistance characteristics. IRIS provides a viable bridge to Generation IV reactors and has excellent capability to satisfy in the near/mid-term timeframe the GNEP requirements for small-scale reactors.

IRIS represents the latest evolution of the LWR technology that has been the overwhelming mainstay of nuclear power development and deployment. While the integral configuration, and the IRIS design in particular, embodies advanced engineering solutions, no new technology development is necessary and therefore a demonstration prototype is not required to attain design certification from the regulatory body.

The integral configuration, as implemented by IRIS, extends traditional passive safety practices by offering a unique, inherent way of coping with small break LOCAs through proper design rather than by using dedicated safety systems. The safety-by-design approach relies on the fact that during a small break LOCA (large break LOCAs are excluded by the integral configuration) the vessel depressurizes due to heat removal and condensation by the integral steam generators while the containment pressure increases due to the steam release through the break. Eventually the two pressures equalize, nullifying the pressure differential across the break which drives the coolant egress. The LOCA stops by itself without any safety system intervention. Numerous computer simulations have been performed under a variety of postulated conditions and all have indicated that the core remains safely covered at all times. However, an accurate and comprehensive experimental investigation is necessary to confirm this behavior, which is a unique feature of integral reactors, and to assess the impact of, and correlation with, the geometric configuration and other safety systems. The results of this investigation will be very important beyond confirming the IRIS intrinsic safety-by-design as they are applicable to other integral designs and will offer also useful data for safety evaluations of water reactors in general.

At this end ORNL and Westinghouse Electric Company have with ENEA a cooperative agreement to perform a campain of integral system tests to provide thermal-hydraulic data for computer code validation and to simulate the operation of IRIS plant for design licensing. The new facility that will simulate the Westinghouse IRIS Pressurized Water Reactor system (SPES3) will be built in Piacenza (Italy) and operated by SIET in the framework of an Italian R&D program on Nuclear Fission, managed by ENEA and supported by the Ministry of Economic Development.

This document deals with the requirements, constraints and data needed for the design of the SPES3 facility.

2. Test Objectives

The SPES3 experimental programme is aimed at:

- Simulating the IRIS system thermal-hydraulic phenomena, the behavior of the passive safety systems and the interaction between the Reactor Vesseland the Containment following specified accidents (SBLOCA and Feedwater and Steam Line Breaks);
- Simulating the thermal-hydraulic behavior of selected key components of IRIS system design, such as the Steam Generators and the Condensers of the Emergency Heat Removal Systems;
- Providing detailed experimental results for the verification and validation of safety analysis codes.

3. Test Facility Requirements

A preliminary verification on the existing SPES2 experimental facility shall be made in order to delineate the modifications required to properly simulate the IRIS system. Whenever compatible with IRIS design, existing SPES2 experimental facility features shall be preserved or adapted.

The design of the SPES3 experimental facility shall comply with the following design constraints:

- The integral layout of the Reactor Pressure Vessel shall be preserved, with the exception of the reactor coolant pump(s) that shall be located outside the Reactor Vessel in order to simplify the design. A single pressure vessel, therefore, shall house a reactor core simulator, a steam generator simulator, a pressurizer, a riser and a downcomer;

- The integral layout of the Reactor Containment shall not be preserved. Rather, the Reactor Containment and the principal safety systems it houses shall be simulated with separated vessels and connecting piping;

- The main Feedwater and Steam Lines shall be modeled up to the main isolation valves;

- The Emergency Heat removal System shall be modeled with one pool housing a condenser simulator for each secondary loop, connected with the main Feedwater and Steam Lines with piping and valves.

The SPES3 experimental facility shall be thermally insulated in order to minimize heat losses to the environment during operation. Active heat tracing of selected components may be required.

The SPES3 experimental facility shall also have the following capabilities:

- Provide a controlled electrical supply system to power the Reactor Core simulator, able to: 1) properly reproduce the IRIS system conditions at the beginning of the transient simulations by means of compensating techniques; 2) accurately simulate the decay heat transient;

- Provide electrical power to the Pressurizer heaters;

- Provide adequate cold water supply capability and drainage capability for equipment filling and draining;

- Provide a control system to safely operate the experimental facility and properly simulate the IRIS safety systems actuation;

- Provide a Data Acquisition System to permanently record all the measured quantities during operation. Further, selected measured quantities shall be visually displayed during operation.

ENEA has the responsibility of the procurement and fabrication of the test facility and the responsibility of the procurement, installation and calibration of the instrumentation, except for the two-flow instrumentation, whose responsibility is of CIRTEN (POLIMI).

ENEA must submit all designs to Westinghouse for review and comment prior to procurement and fabrication.

4. Scaling criteria

The desired volumetric and power scaling factor for SPES3 facility should be 1/100. As the electrical supply capability currently available at SIET for the reactor core simulator is 6.5 MW, the SPES3 facility shall be designed with a volumetric scaling factor of 1/100 and power scaling factor of 150. By so doing, the full power operation and the very beginning of the transient simulations following reactor trip shall not be exactly reproduced. Adequate compensating techniques that will assure that the stored energy in the system is properly reproduced at the beginning of the transient simulations shall be implemented.

Each SPES3 experimental facility component shall be designed according to a blend of the following scaling criteria:

- Volumetric scaling factor 1/100;
- Prototypical fluid and thermodynamic conditions;
- Residence time preserved;
- Specific and relative vertical elevations preserved;
- Power over flowrate ratio preserved;
- Average heat flux preserved in heat transferring equipment;
- Hydraulic pressure drops preserved.

5. Test Article Description

The Reactor Pressure Vessel, together with all the contained components (Core simulator, Steam Generators simulator, Riser, Downcomer and Pressurizer), the associated primary system circulating Pump, the main Feedwater and Steam Lines, the vessels that simulate both the Reactor Containment (Drywell, PSS and Reactor Cavity) and the Safety Systems (Automatic Depressurization System, Long-Term Gravity Make-Up System, Emergency Borating Tanks and Emergency Heat Removal System) together with the associated piping and valves are regarded as test articles. A schematic representation of the IRIS SPES3 test articles is shown in Figure 1.

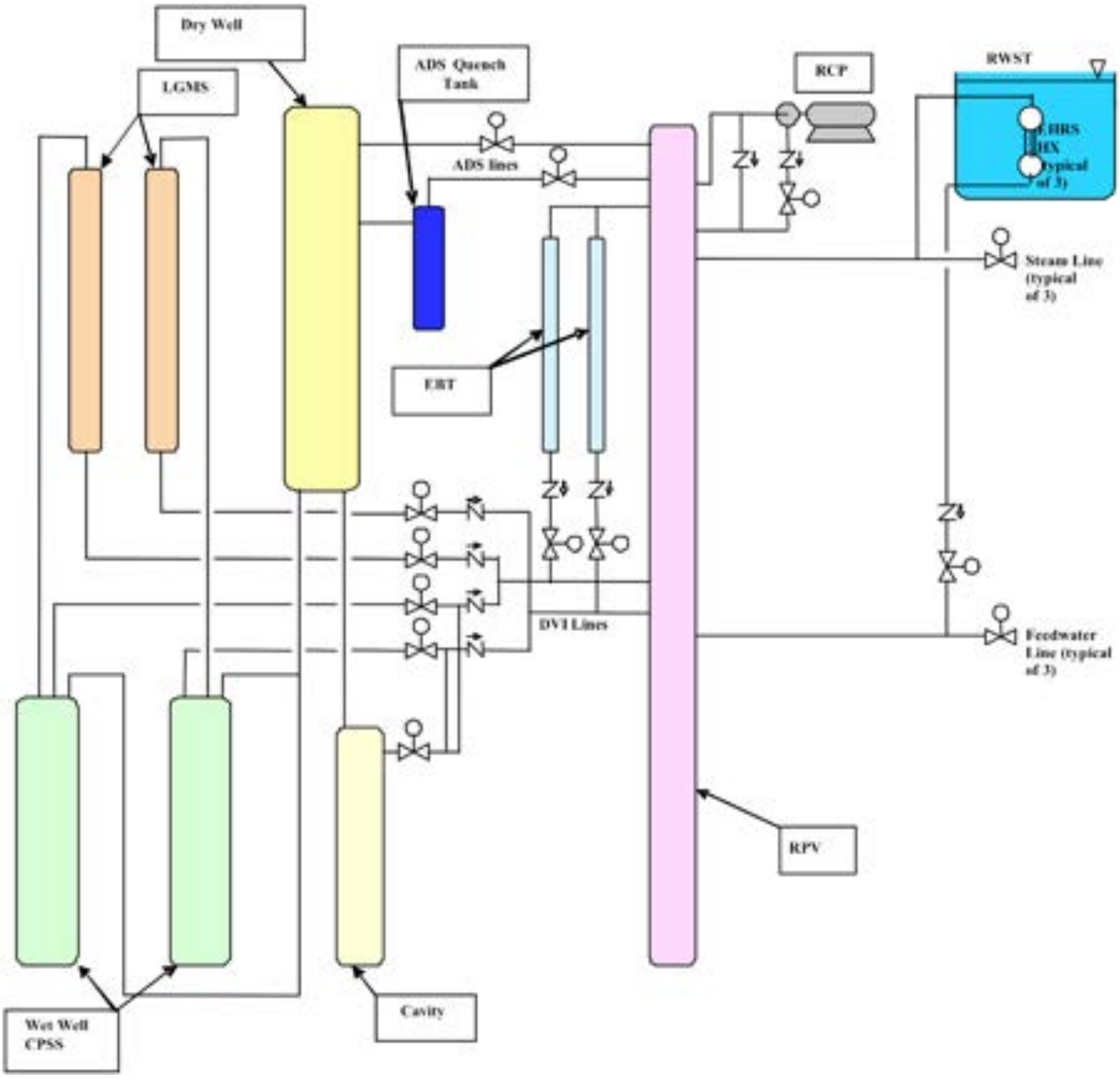

Figure 1. IRIS SPES3 test articles schematic representation

All tanks, pipings and valves shall be designed in accordance with applicable Italian code requirements for non-nuclear components, consistent with the required working pressures and temperatures and with the repeated heatup and cooldown expected during operation. Adequate pipe strength, support and flexibility shall be provided to insure the integrity of the system. All tanks, pipings and valves shall be sized and located at the proper elevations on the basis of IRIS plant prototypical dimensions and shall be properly instrumented.

In what follows, all test articles are discussed in detail.

5.1. Reactor Pressure Vessel

The Reactor PressureVessel shall be constructed of Stainless Steel and shall be designed for a pressure of 17.25 MPa and related saturation temperature of 630 K. The Reactor Pressure Vessel shall be of integral design and shall include a representation of all the principal components of IRIS Reactor Vessel with the only exception of the coolant pump(s), that shall be located outside RPV.

Any volumetric distortion related with the piping connecting the Reactor Pressure Vessel and the external Pump(s) shall be properly compensated.

IRIS design components that shall be represented in RPV are:

- **Reactor Core Simulator**, which shall be simulated with electrically heated rods that should be capable of reproducing, with the proper scaling factor, both the full power and the decay power for IRIS reactor. Also the core bypass should be simulated.

  Besides, taking into account that the testing is not addressing the detailed investigation of departure from nucleate boiling phenomena, the heat flux distribution in the heated rods should be uniform in the radial and axial direction, except for two that should have a power ratio of 1.2.

  The heated rods shall be instrumented as thoroughly as possible to both monitor the bundle temperature and protect the rods from overheating. The heated rods may be slightly overpowered in order to compensate for the thermal dispersions from RPV during both steady state and transient operation, provided that the distortion in the core heat flux is acceptable. Any volumetric distortion shall be properly compensated.

- **Riser Simulator**, which shall be constructed of Stainless Steel and shall be volumetrically overdesigned, in order to compensate for the volumes existing in IRIS full scale Reactor Pressure Vessel that will not be explicitly modeled in SPES3 facility (Steam Generators Central Columns and Annular Space). Provision shall be made for the simulation within the Riser of the Control Rods and associated driving mechanism. In particular, the metal mass of the Control Rods and associated driving mechanism shall be reproduced.

- **Steam Generator Simulator**, which shall be realized with coiled tubes wounded around the riser simulator. The Steam Generator simulator shall be subdivided into independent subunits according to the test requirements. In particular, a subdivision into three subunits, simulating respectively four, two and two full size IRIS Steam Generators, shall be implemented. The subunit simulating four full size IRIS Steam Generators will be used for both the system integral test and the Steam Generator separate test, and shall therefore be instrumented more thoroughly than the other two subunits, each simulating two full size IRIS Steam Generators, that will be used for the system integral test only.

  Distortions in coils diameter and pitch are in principle allowed for, provided that the impact on the Steam Generator secondary side fluid dynamics is tolerable. Any volumetric distortion shall be properly compensated.

  Prototypical tube material should be preferably used, but material with similar heat transfer characteristics is allowed.

- **Pressurizer Simulator**, which shall be constructed of Stainless Steel and shall replicate the inverted top hat structure of IRIS full scale system design. The Pressurizer simulator shall be used to control the Reactor Pressure Vessel pressure during operation and to maintain the contained testing fluid at prototypical thermodynamic conditions. The pressurizer heater may be overpowered in order to compensate for the heat losses from the pressurizer dome.

- **Downcomer Simulator**, which shall be constructed of Stainless Steel and shall envelope the power channel simulator. Provision shall be made for the simulation within the Downcomer of the Reflector. In particular, the metal mass and heat exchange surface of the Reflector shall be reproduced.

5.2. Main Feedwater and Steam Lines

The main Feedwater and Steam Lines shall be modeled up to the main feedwater and steam isolation valves. Both the Feedwater and Steam lines shall be subdivided into independent sublines according to the design of the Steam Generator simulator. In particular, a subdivision into three sublines, simulating respectively two, one and one IRIS full size lines, shall be implemented. They shall be constructed of Stainless Steel and designed for a pressure of 17.25 MPa and a saturation temperature of 630 K.

The main Feedwater and Steam Lines should be connected respectively to a feedwater supply system and a steam discharge system.

The feedwater supply system shall be capable of providing the Steam Generator simulators with scaled flowrate in all the operating conditions expected during the transients, whereas the steam discharge system shall be capable to transfer the full core power to the environment. The former shall be designed upstream the isolation valves of the main feedwater line for a pressure ≥ 10.0MPa and a temperature ≥ 523K, the latter shall be designed downstream the main steam line isolation valves for the same design pressure and temperature.

5.3. Reactor Containment

The Reactor Containment shall be simulated with separate vessels and connecting piping, without reproducing the integral layout of IRIS full scale Containment.

The Dry Well shall be simulated with one vertical cylindrical vessel with eliptical ends.

The Pressure Suppression System shall be simulated as a vertical cylindrical vessel, which height approximates the volume vs. height variations of the IRIS containment, and eliptical ends.

The Cavity and DVI valve Room shall be simulated as a vertical cylindrical vessel, whose height approximates the volume vs. height variations of the IRIS containment, and eliptical ends.

All vessels shall be constructed of Stainless Steel and shall be designed for a pressure of 2.0 MPa and a temperature of 485 K.

A distortion in the shape of the PSS spargers is in principle allowed for, provided that the mixing effectiveness is properly reproduced. Due to the not integral design of the Containment simulator, some of the connecting piping will not have an analog in IRIS full scale design. Any volumetric distortion shall be properly compensated. Provision for the compensation of the excessive surface area (active heat tracing or internal insulation) may be required.

5.4. Automatic Depressurization System

The Automatic Depressurization System shall be simulated with two separate lines, simulating respectively two and one IRIS full scale ADS trains. Each line shall connect the RPV simulator with both the Containment Dry Well simulator and the Quench Tank by means of two sublines modelling 4-inch and 6-inch IRIS ADS lines. The subline simulating the 4-inch ADS one should terminate in a sparger within the Quench Tank.

Both the Quench Tank and the connecting piping shall be constructed of Stainless Steel. The piping upstream of the isolation valves shall be designed for a pressure of 17.25 MPa and a temperature of 630K, whereas that located downstream for a pressure of 2.0 MPa a temperature of 485 K. The Quench Tank shall be designed for a pressure of 2.0 MPa and a temperature of 485 K

A distortion in the shape of the Quench Tank sparger is in principle allowed for, provided that the mixing effectiveness is properly reproduced.

5.5. Long-Term Gravity Make-Up System

The Long-Term Gravity Make-Up System shall be simulated with two equal tanks, connected with both the PSS Containment simulator and the DVI Line, see Fig. 1. Both the tanks and the connecting piping shall be constructed of Stainless Steel and shall be designed for a pressure of 2.0 MPa and a temperature of 485 K.

5.6. Emergency Borating Tanks

The Emergency Borating Tanks shall be simulated with two equal cylindrical tanks, connected with both the RPV simulator and the DVI Line, see Fig. 1. Both the tanks and the connecting piping shall be constructed of Stainless Steel and shall be designed for a pressure of 17.25 MPa and a temperature of 630 K.

5.7. Emergency Heat Removal System

The Emergency Heat removal System shall be simulated with three Condenser simulators immersed in a water filled pool open to the atmosphere and connected to the main Feedwater and Steam Lines in compliance with design of the Steam Generator simulator and of the Steam and Feedwater Lines. The Condenser simulators should model respectively two, one and one IRIS full size Condensers. The inlet of each Condenser simulator should be connected with the associated main steam line, whereas the outlet with the associated main feedwater line.

Three Steam Generator Make-Up Tanks shall be implemented, if the safety analysis shows they are necessary and they shall simulate respectively two, one and one IRIS full size Steam Generator Make-Up Tanks.

Each Condenser simulator shall be realized with vertical straight tubes connected to headers.

The three Condenser simulators and the associated connecting piping shall be constructed of Stainless Steel and designed for a pressure of 17,25 MPa and a temperature of 630K.

5.8. Passive Containment Cooling System

PCCS shall be simulated with a heat exchanger located at the top of the Dry Well. The heat transfer scaling factor of the heat exchanger and associated piping shall be equal to 1/100. The heat exchanger and associated piping should be designed for a pressure ≥ 2.0 MPa and a temperature ≥ 485K.

The PCCS should be connected to the auxiliary water cooling system and manually actuacted.

5.9. Break System

The Break System shall simulate the split and DEG break opening and discharge during the Loss of Coolant transients.

Each break line shall include a break area simulating orifice, a break initiation valve and a piping system to properly connect the break to the appropriate source and discharge points. The part of the Break System upstream the break area simulating orifice shall be designed for a pressure of 17.25 MPa and a temperature of 630 K, while the part of the Break System downstream the break area simulating orifice shall be designed for a pressure of 2.0 MPa and a temperature of 485 K.

For DEG break tests, the Break System shall consist of two break lines separated by a normally open valve in the process line, each break line containing a normally closed break initiating valve.

Scaling criteria that shall be applied in the design of the Break System are:

- Break flow scaling factor: 1/100
- Minimal flow disturbance in the part of the break line downstream the break area simulating orifice.

A break system should be provided for the following lines:

- DVI line discharging into the reactor vessel cavity;
- EBT to RPV balance line discharging into the conttainment Dry Well;
- 6-inch ADS line discharging into the conttainment Dry Well;
- main steam line connecting two SG, discharging into the the reactor vessel cavity;
- feedwater line connecting two SG, discharging into the conttainment Dry Well.

6. Documentation

6.1. Facility Description Report

The final configuration of the test facility shall be fully documented in a **Facility Description Report** that will include the as-built drawings for all components, the installed condition of the experimental facility and the location of the instrumentation, in order to permit accurate post-test modeling with safety analysis computer programs. The as-built conditions will be verified by an engineer associated with the test program in order to assure conformance with the facility design requirements. Any change to the attributes shown on the as-built records (hardware, instrumentation and procedures) shall be accurately documented in revisions to the as-built records, together with the date the change was in effect since. All revisions shall be controlled in accordance with the requirements of the original records.

6.2. Testing reports

The testing activity shall be documented by means of three types of reports: test procedure, day of test report and data report.

A **Test Procedure** shall be prepared by the test performer for each test incorporating information provided by Westinghouse (e.g., set-points for the system actuation) and describing the initial conditions, controls to be performed before the test execution, sequence of operations, criteria for the acceptability of test, etc..

A **Day of Test Report** should be issued as soon as practical after the completation of a test run and it shall include a brief summary of key information to judge the validity of the test together with the measured data and the pertinent information to help judge if the run constitutes a valid test, such as:

- Specified vs. actual initial test conditions,
- Failed or out of service instrumentation,
- Facility modifications since previous test,
- Deviations from test procedure.

A **Final Data Report** should be issued as soon as possible after the completion of the test campaign. Such report will serve to summarize, compile and formally complete the experimental activities in the program.

7. Test Facility Control

The test facility control system shall reproduce IRIS system process control where necessary. A list of process controls that shall be utilized in the facility is outlined in the following. Additional controls may be added as necessary in order to improve the operability of the test facility.

- **Core simulator**: the control system shall: 1) allow to decrease heating power according to decay heat vs. time curve; 2) to protect the rods from overheating by means of an interlock; 3) actuate the shut off of the electrical power delivered to the heated rods (reactor trip) on any of the following signals: ADS actuation, EBT actuation, EHRS actuation, low NPSH and low Pressurizer level. The turbine trip actuated by reactor trip may be simulated by annulling the steam and feedwater flow rate.
- **Pressurizer**: the electrical power delivered to the heated rods shall be interlocked to shut off at high heater rods temperature in order to protect the rods from overheating. Moreover it shall be regulated in order to control the Pressurizer pressure to a set-point.
- **Steam Generators**: the control system should regulate the steam pressure at the discharge of the SG simulators by means of steam flow rate and the plant power output by means of the feedwater flow rate, when operating at power.
- **Primary Pumps**: the primary pumps shall be automatically tripped in case of EBT actuation or with a given delay on low NPSH or low Pressurizer level.
- **Steam line isolation valves**: the isolation valves shall be automatically closed if the SG pressure decreases below a set-point or the associated EHRS will be actuacted.
- **Feedwater isolation valves**: the isolation valves shall be automatically closed if the associated EHRS will be actuacted.
- **ADS**: the ADS actuation to be defined.
- **DVI**: the DVI actuation to be defined.
- **EHRS**: the EHRS actuation to be defined.
- **PCCS**: the PCCS actuaction time shall be programmable.

Detailed information regarding the setpoints to be used during the tests shall be provided to the test performer prior to each test.

8. Data Acquisition System and Instrumentation

8.1. Data Acquisition System

DAS consists of all devices (hardware and software) used to process, transmit and record the signals generated by the instrumentation, together with the associated power supplies and connecting wiring. The Data Acquisition System shall have the following capabilities.

- Provide real-time monitoring capability during the test facility operation. In particular, selected measured quantities and calculated parameters shall be visually displayed (in engineering units) during operation, both current values and time histories. The information displayed shall allow the test loop operators to assess that the test loop conditions effectively meet those specified for the test being executed, to confirm that expected events (valves opening and closing) occur as expected and to verify that no unexpected events that might negatively affect the test occur. A summary of the on-line displayed information will be included into the day of test report.

- Provide adequate permanent recording capability of all the measured quantities during operation for post-test analysis. The stored data should be in both engineering units and instrument output units and should include a list of the employed conversion factors for each instrument channel recorded. The sampling rate of DAS shall be tailored during the course of the testing on the basis of the rapidity of change of the phenomena being investigated and on the basis of the instrumentation response time.

- Provide both control function and actuation capability required to properly actuate the test facility components as needed during operation.

- Provide post-test validation capability to the cognizant engineer on the tests performed. In order for a test to be valid, sufficient instrumentation must be operable. A list of the critical instruments that must be operable should be reported in test procedure. Besides, the test conditions experienced should reasonably match those called for in the test matrix.

The Data Acquisition System shall be designed and implemented in order to minimize noise pick-up in the generated signals.

The test performer shall be responsible to assess that the Data Acquisition System can fulfill the above stated requirements.

8.2. Instrumentation

The following type of instrumentation shall be provided for SPES3 integral system tests:

- Thermocouples shall be used to measure the primary and secondary coolant temperatures as well as any supply or component cooling water. They should also measure selected component wall temperatures in order to allow the assessment of mass/energy balance on the components.
- Flowmeters shall be used to provide measurement of all single phase water flow rates.The range of these instruments must be carefully selected to minimize the errors.
- Pressure transducers shall be used to record the absolute pressure within various tanks and at selected location in the test loop.
- Differential pressure transducers shall be used to measure pressure drops and liquid level in different tanks and vessel.
- Two-phase flow measurements should be provided and shall be consistent with the expected steam or water flow rates and thermal hydraulic conditions.

The Instrumentation shall be designed and implemented in order to minimize noise pick-up in the generated signals. For each required measurement, the instrument type and span shall be properly selected on the basis of the pre-test simulations.

Table 8.1 reports the required measurements to be performed in SPES3 facility, while Table 8.2 shows the required experimental uncertainties.

Table 8.1. Measurements list

FLUID TEMPERATURES		
N°	Location	Comments
1.1	Downcomer simulator: 3 elevations (including Core simulator inlet), 4 azimuthal positions [12 measurements]	
1.2	Core simulator: 4 elevations (including Core simulator outlet), [4 measurements]	A dummy rod could be used for the Core simulator fluid temperature measurements
1.3	Riser simulator: 3 elevations (one elevation shall match Riser simulator holes at 1/3 elevation; one elevation shall match Pressurizer simulator holes), [3 measurements]	
1.4	Pressurizer simulator: 2 elevations (liquid and steam) [2 measurements]	
1.5	Coolant Pump(s): inlet and outlet [2 measurements]	
1.6	Steam Generators simulator (subunit simulating 4 full scale SG for separate effect test): 2 elevations, 4 azimuthal positions [8 measurements]	
1.7	Steam Generators simulator outlet: 3 radial positions (1 for each simulator), 4 azimuthal positions [12 measurements]	Provided that the tube bundles shrouds can be axially extended towards the Downcomer simulator in order to allow enough mixing of the discharged flow and make a local fluid temperature measurement representative
1.8	Steam Generators simulator secondary side: inlet headers and outlet collectors [6 measurements]	
1.9	Main Feedwater and Steam lines: 1 measurement close to the connection with EHRS Hot and Cold legs [6 measurements]	
1.11	EHRS Condenser: inlet headers and outlet collectors [6 measurements]	
1.12	EHRS Pool: 3 elevations, 4 horizontal positions [12 measurements]	
1.13	Dry Well: 5 elevations, [5 measurements]	
1.14	PSS: 3 elevations (1 gas, 2 liquid) [6 measurements]	
1.15	Cavity: 2 elevations [2 measurements]	
1.16	EBT: 2 elevations [4 measurements]	
1.17	LGMS Tank: 2 elevations [4 measurements]	
1.18	ADS Tank: 2 elevations [2 measurements]	
1.19	DVI Line header [1 measurement]	
1.20	PCCS Condenser: 1 measurements at inlet and outlet:	
1.21	All piping lines (except main Feedwater and Steam Lines and EHRS Hot and Cold legs): 1 measurement at inlet and outlet and 1 intermediate measurement if the pipe length exceed 10.0 m [20-30 measurements]	

Table 8.1. Measurements list-continued

METAL TEMPERATURES

N°	Location	Comments
2.1	Core simulator: 10 elevations (skewed toward the upper elevation of the heated rods), 12 radial positions, inner rod surface [120 measurements]	
2.2	Reactor Integral Vessel: 5 elevations, inner surface and outer surface (under thermal insulation) [10 measurements]	
2.3	Pressurizer heater: [1 measurement]	
2.4	EHRS Condenser: 5 positions for each tube [20 measurements]	Possible DNB at start
2.5	Dry Well: 6 elevations, 2 azimuthal positions, outer surface (under thermal insulation) [12 measurements]	
2.6	PCCS Condenser: [3 measurements]	

ABSOLUTE PRESSURES

N°	Location	Comments
3.1	Pressurizer vapor region [1 measurement]	
3.2	Downcomer bottom [1 measurement]	
3.3	Coolant Pump(s) inlet and outlet [2 measurement]	
3.4	Steam Generators simulator outlet collectors: [3 measurements]	
3.5	EHRS Cold Leg: close to main Feedwater Line connection [3 measurements]	
3.6	Dry Well: top region [1 measurement]	
3.7	PSS: top position [2 measurements]	
3.8	Cavity: top position [1 measurement]	
3.9	EBT: top position [2 measurements]	
3.10	LGMS Tanks: top position [2 measurements]	
3.11	ADS Tank: top position [1 measurement]	
3.12	PCCS Condenser: close to auxiliary cooling water connection [1 measurement]	

Table 8.1. Measurements list-continued

PRESSURE DROPS

N°	Location	Comments
4.1	Downcomer [1 measurement]	
4.2	Core simulator [1 measurement]	
4.3	Riser simulator [1 measurement]	
4.4	Pressurizer holes [1 measurement]	
4.5	Coolant Pump(s) between suction and discharge [1 measurement]	
4.6	Steam Generator simulator [3 measurements]	
4.7	Riser check valves holes [4 measurements]	
4.8	Steam Generator simulator secondary side [3 measurements]	
4.9	Main Steam line: [3 measurements]	
4.10	EHRS Hot Leg: from the main steam line connection to the condenser inlet [3 measurements]	
4.11	EHRS Condenser: between inlet header and outlet collector [3 measurements]	
4.12	EHRS Cold Leg: from the condenser outlet to the main feedwater line connection [3 measurements]	
4.13	Main Feedwater line [3 measurements]	
4.14	PCCS Condenser: 1 measurement between inlet and outlet	
4.15	All piping lines (except main Feedwater and Steam Lines and EHRS Hot and Cold legs): 1 measurement between inlet and outlet [10-20 measurements]	

Table 8.1. Measurements list-continued

MASS FLOW RATES

N°	Location	Comments
5.1	Coolant Pump(s) discharge [1 measurement]	
5.2	Riser simulator [1 measurement]	Provided that heated thermocouples can be implemented and that a local measurement is representative
5.3	Steam Generators simulator outlet: 3 radial positions (1 for each simulator), 4 azimuthal positions [12 measurements]	Provided that heated thermocouples can be implemented and that a local measurement is representative
5.4	Main Feedwater line close to main isolation valve and upstream of EHRS Cold leg connection [3 measurements]	
5.5	EHRS Cold Leg close to the connection with main Feedwater Line [3 measurements]	
5.6	EBT lines [2 measurements]	
5.7	DVI lines: all lines and total RPV injection [7 measurements]	
5.8	PCCS Condenser: [1 measurement]	
5.9	Break flow system: [1-2 measurements for each line]	

LIQUID LEVELS

N°	Location	Comments
6.1	Pressurizer simulator [1 measurement]	
6.2	Core-Riser [1 measurement]	
6.3	Steam Generators-Downcomer [1 measurement]	
6.4	EHRS Pool [1 measurement]	
6.5	Dry Well [1 measurement]	
6.6	PSS [2 measurements]	
6.7	Cavity [1 measurement]	
6.8	EBT [2 measurements]	
6.9	LGMS Tanks [2 measurements]	
6.10	ADS Tank [1 measurement]	

Table 8.2. Experimental uncertainties

Pressure	± 2-3 %
Pressure drop	± 2-3 %
Single-phase mass flow rate	± 2-3 %
Two-phase mass flow rate	± 10-20 %
Liquid level	± 5-10 %
Fluid temperature	± 1-2 K
Wall temperature	± 1-2 K
System geometry	± 0.5%

9. Test Operation

The operation of the test facility shall be established and documented in the test operating procedures that will be reviewed and approved by Westinghouse on a test-by-test basis. In particular, such process will include the following:

- Westinghouse will provide test performer with a summary of key items to be incorporated into a specific test, such as initial conditions, setpoints for safety systems actuation, etc.
- Test performer will incorporate this information into their procedure for the specific test being performed.
- The test procedure is transmitted to Westinghouse for review and approval.

Operating procedures shall be prepared for the Integral System tests, described in Table 9.1, for the Separate Effects tests, described in Table 9.2, and for shake-down tests.

Table 9.1 SPES3 Test Matrix

Test Type	Test Initiating Event	Purpose	Comments
Low Elevation SBLOCA	Double-ended guillotine 2-inch DVI line break	Verify design basis case system response and mixture level	DBE: all safety systems is operating except for a ADS train single failure
	1-inch DVI line split break	Verify design basis case system response and mixture level	DBE: all safety systems is operating except for a ADS train single failure
	Double-ended guillotine 2-inch DVI line break	PRA Success Criteria Verification: confirm PCCS ability to provide diverse containment cooling with total EHRS failure	BDBE: total EHRS failure with maximum ADS flow
Long term recirculation	Long term recirculation	Demonstrate that it is possible maintain acceptable long term core cooling with reduced ADS capacity (with only 2 ADS trains)	This will be the long term extension of DEG 2-inch DVI line break with reduced ADS capacity.
	Long term recirculation	Demonstrate long term recirculation with full ADS capacity available	Sensitivity case: this will be the long term extension of DEG 2-inch DVI line break with full ADS capacity available.
High Elevation SBLOCA	Double-ended guillotine 4-inch EBT line break	Verify design basis case system response and mixture level	DBE: all safety systems is operating except for a single failure on one ADS train
	Double-ended guillotine 4-inch EBT line break	PRA Success Criteria Verification: confirm PCCS ability to provide diverse containment cooling with total EHRS failure	BDBE: total EHRS failure with maximum ADS flow
ADS break	Double-ended guillotine 6-inch ADS line break	Show plant response with reduced ADS capacity	DBE: maximum PZR steam space break Bounds inadvertent 6-inch valve opening
Feedwater Line Break	Double-ended guillotine feedwater line break inside containment	Show non-LOCA plant response with partial EHRS actuation (by design for all non-LOCA events).	DBE: to confirm that the SG Makeup tank is not necessary
Steam Line Break	Double-ended guillotine steam line break inside containment	Show non-LOCA plant response with partial EHRS actuation.	DBE: to confirm that the SG Makeup tank is not necessary

Table 9.1 SPES3 Test Matrix

Test Type	Test Initiating Event	Purpose	Comments
Safe shutdown sequence	Loss of all power	Demonstrate safe shutdown sequence.	Observe primary coolant shrinkage, switch to primary coolant natural circulation, EHRS HX cool-down capability

Table 9.2. SPES3 Separate Test Effects, Test Matrix

Component	Type of test	Purpose
SG	Heat transfer test	
EHRS Condenser	Heat transfer test	

10. Quality Assurance Requirements

The design, construction and operation of the test facility shall be conform to the requirements of the QA Manual of organizations involved and of the IRIS-SPES3 QA plans issued specifically for this activity. In particular the Quality Assurance concerning the testing shall conform to ASME NQA-1-1989 edition through NQA-1b-1991 Addenda. As this is a safety related test, the Code of Federal Regulations title 10 part 21 (10CFR21) also applies. To incorporate the requirements of NQA-1, the following measures shall be taken in the detailed test procedure/Quality Assurance plan.

1. Provision for ensuring that those performing the tests are qualified and trained in the quality assurance requirements of the test specifications.
2. Provision for ensuring that changes to the test procedure are reviewed and approved to the same extent as the originals.
3. Provision for ensuring that the latest approved revision of the test procedure is used.
4. Provision for the calibration of the test equipment, traceable to recognized national standard. If no such standard exists, a description of the calibration method shall be included.
5. Provision for verification and configuration control of computer software (if any) used to collect or reduce the data.
6. Provision for reporting and reconciling deviations from the approved test procedure.
7. Provisions (such as a signed check list) for ensuring that test prerequisites are met. Test prerequisites include calibrated instrumentation, appropriate equipment, trained personnel, condition of test equipment and item(s) to be tested, and provision for data acquisition.
8. Provision for ensuring that each test has the necessary monitoring
9. Provision for maintaining the desired test conditions (a test log containing periodic signed entries that include any pertinent observations or information not captured elsewhere is recommended).
10. Documented evaluation of test results by the test sponsor to ensure that each test requirements were met.
11. Identification in the test records of the items tested, date of the test, instrumentation and data recorders, type of observation, results and acceptability, action taken in connection with noted deviations, and persons who evaluates the test results.
12. The testing organization shall verify and document that the instrumentation calibrations have been performed prior to the testing..

13. The testing organization shall provide a facility description report which includes the as-built drawings documenting the facility configuration.

11. References

1. WCAP-16062-P rev. 0, *IRIS Plant description Document*, 2003
2. WCAP-16082-P rev. 0, *Preliminary safety assessment of the IRIS Reactor*, vol. I and II, 2003
3. FPN-P9LU-001 rev. 0, *SPES 3 Integral test: organisation of Facility analysis and modelling*, 2007